USER: SIECAW
DATE: Friday, March 17, 2006
DGN: ...\standard\2006\lsp101.dgn

CITY OF LINCOLN NEBRASKA	CITY PROJECT NO.	SHEET NO.
	LSP	1
	Date: 03-2005	Drawn: CAW
	Scale NONE	Checked:
		Approved:

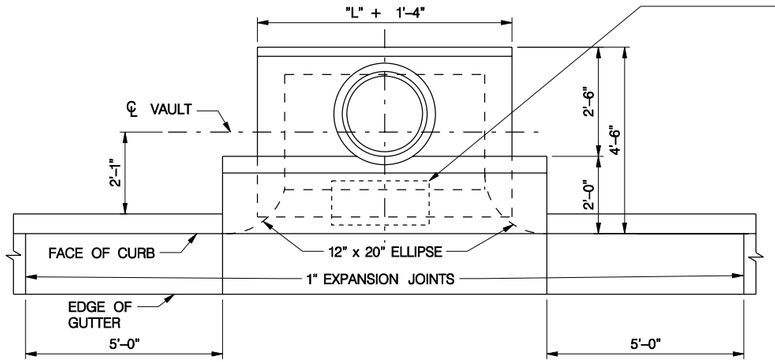

PLAN OF TYPE "A-2" STORM DRAINAGE INLET

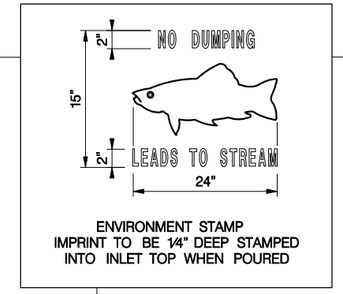

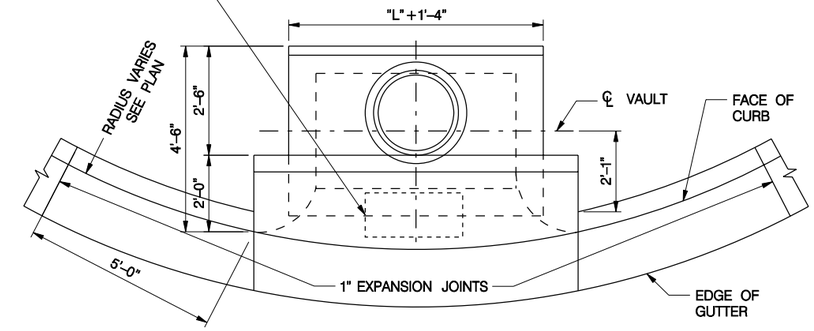

PLAN OF TYPE "A-2" RADIUS STORM DRAINAGE INLET

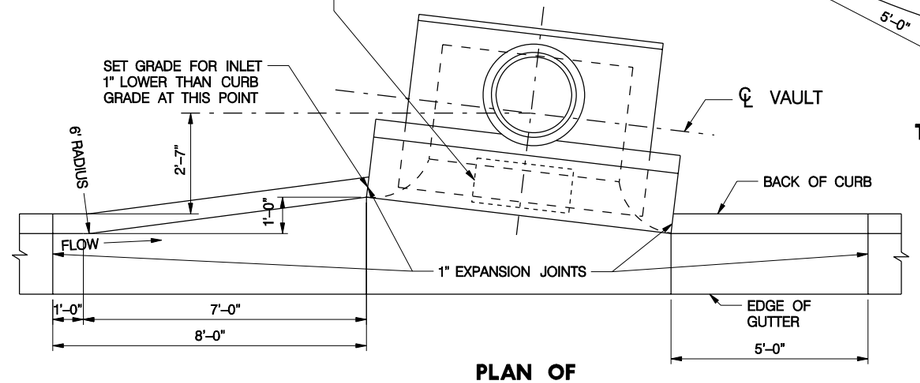

PLAN OF TYPE "A-2" CANTED STORM DRAINAGE INLET

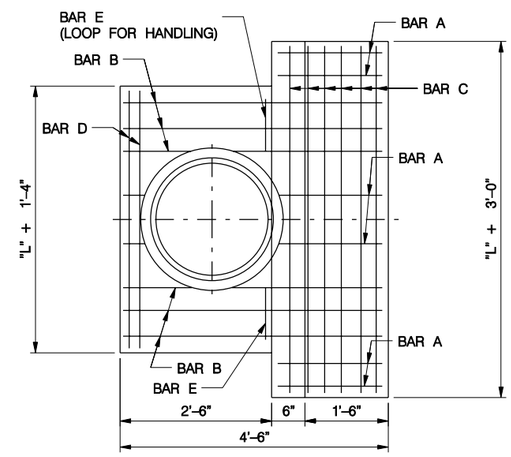

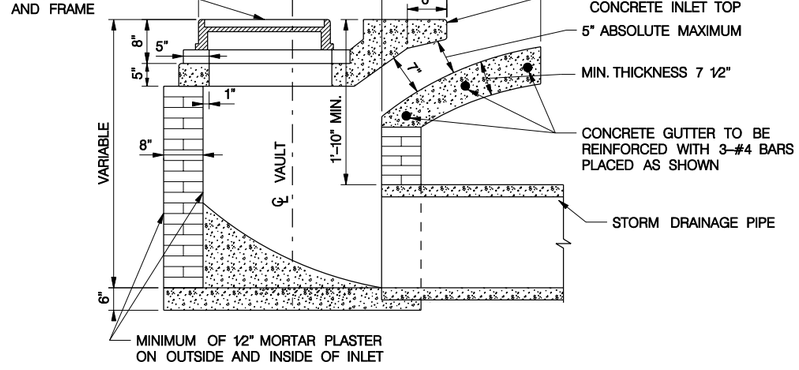

SECTION OF STORM DRAINAGE INLET

GENERAL NOTES:

ALL REINFORCING STEEL SHALL BE DEFORMED BARS CONFORMING TO A.S.T.M. SERIAL DESIGNATION A-305-507 AND SHALL SATISFY THE BEND TEST REQUIREMENTS FOR STRUCTURAL GRADE STEEL IN ACCORDANCE WITH THE REQUIREMENTS.

MINIMUM DEPTH OF EMBEDMENT FOR REINFORCING STEEL SHALL BE 2" UNLESS OTHERWISE INDICATED.

ALL CONCRETE SHALL BE L3500.

EACH INLET SHALL INCLUDE A CAST IRON COVER AND FRAME. (SEE L.S.P. 162)

EACH INLET SHALL INCLUDE LENGTH OF CURB AS PER SPECIFICATIONS.

ALL REINFORCING SHALL BE EPOXY COATED.

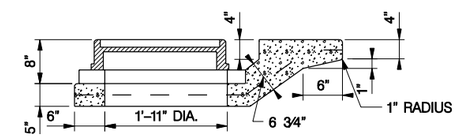

PLAN & SECTIONS OF PRECAST REINFORCED CONCRETE INLET TOP

SCHEDULE OF REINFORCEMENT FOR PRECAST CONCRETE INLET TOP

BAR	SHAPE	INLET OPENING = "L" 72"		
		No.	Size	Length
A	6" 8"	6	#4	1'-9 1/2"
B	8" 8"	10	#4	4'-6"
C		8	#4	8'-9"
D		2	#4	7'-0"
E	8"	2	#4	3'-0"

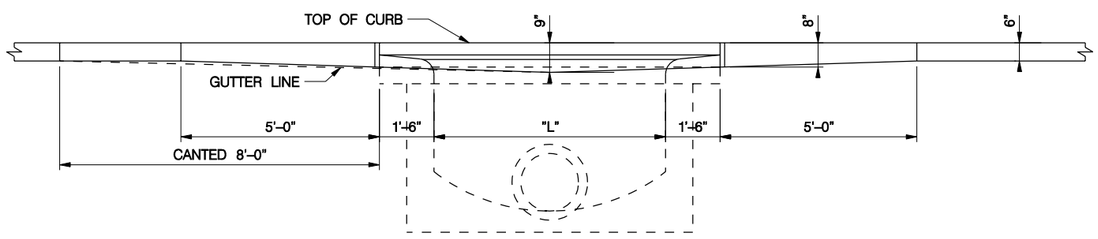

ELEVATION OF GUTTER DEPRESSION AT FACE OF CURB

PROFESSIONAL CIVIL ENGINEER
THOMAS S. SHAFER
E-10679
STATE OF NEBRASKA

STORM DRAINAGE INLET, TYPE 'A-2'
L.S.P. 101