USER: SIECAW
DATE: Friday, March 17, 2006
DGN: ...\standard\2006\lsp131.dgn

CITY OF LINCOLN NEBRASKA	CITY PROJECT NO.	SHEET NO.
	LSP	1
	Date: 03-2005	Drawn: CAW
	Scale NONE	Checked:
		Approved:

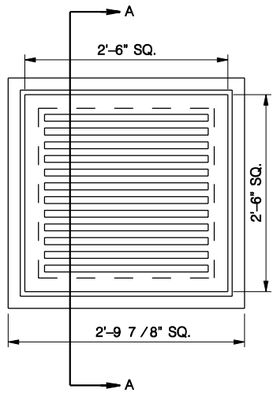

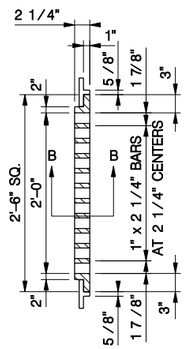

SECTION A-A

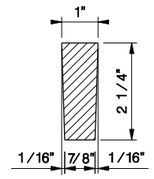

SECTION B-B

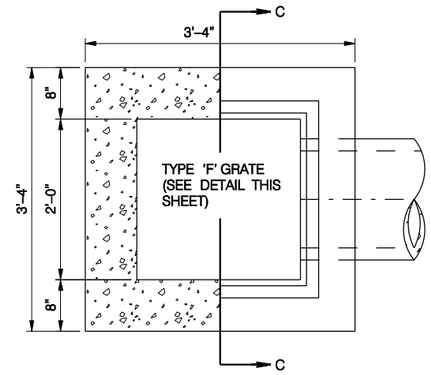

TYPE 'F' GRATE INLET

NOTE:
FOR DETAIL OF COVER AND FRAME, SEE L.S.P. 162

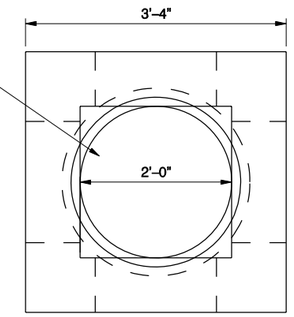

DETAIL OF TYPE 'F-3' INLET TOP

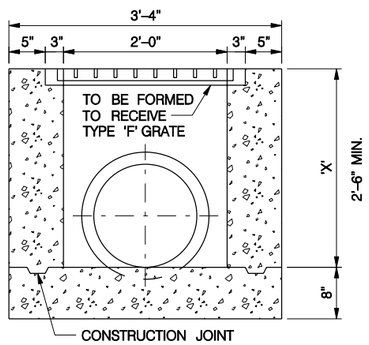

SECTION C-C
TYPE 'F-1A'

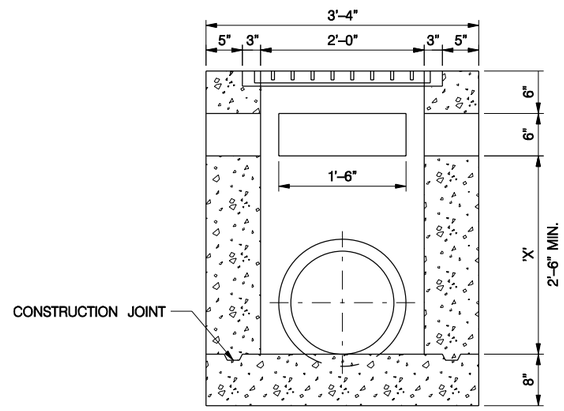

SECTION C-C
TYPE 'F-2A'

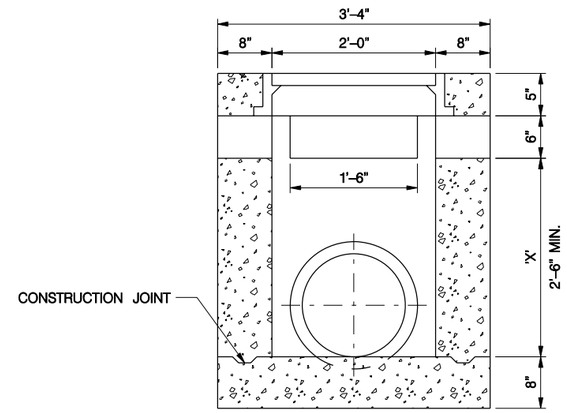

SECTION C-C
TYPE 'F-3A'

APPROX. QUANTITIES FOR DRAINAGE INLETS			
'X' DEPTH	TYPE 'F-1A'	TYPE 'F-2A'	TYPE 'F-3A'
FT.	CONC. CU. YDS.	CONC. CU. YDS.	CONC. CU. YDS.
3.0	1.1	1.3	1.3
4.0	1.3	1.5	1.5
5.0	1.6	1.8	1.8
6.0	1.8	2.1	2.1
7.0	2.1	2.3	2.3
8.0	2.4	2.6	2.6
9.0	2.6	2.8	2.8
ADD 0.1	0.03	0.026	0.026
EACH INLET SHALL INCLUDE A CAST IRON GRATE AND FRAME.			
TABLE DOES NOT INCLUDE DEDUCTION FOR PIPE OPENING.			

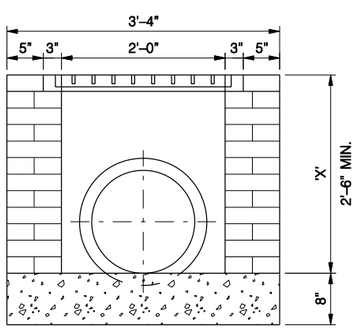

TYPE 'F-1B'

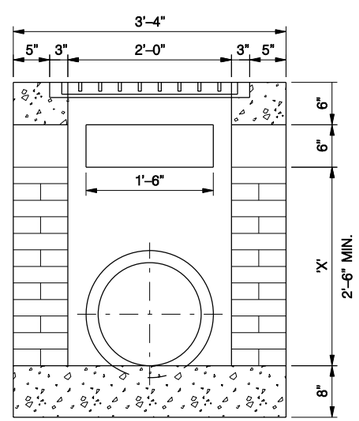

TYPE 'F-2B'

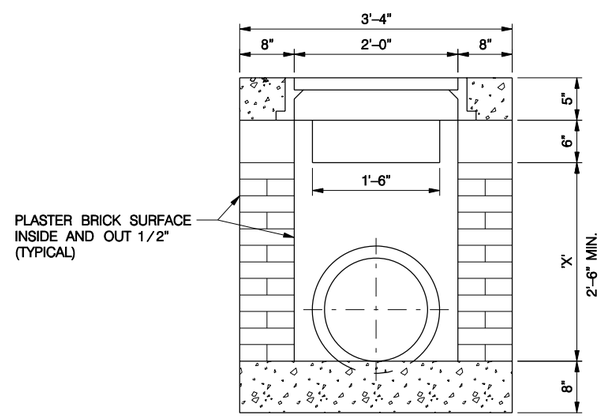

TYPE 'F-3B'

NOTE:
PROVIDE OPENINGS IN WALLS OF TYPE "F-2" AND "F-3" INLETS AS NOTED ON THE PLANS.

DETAILS AND QUANTITIES REFLECT OPENINGS IN 3 WALLS AS TYPICAL FOR TYPE "F-2" AND TYPE "F-3" GRATE INLETS.

ALL CONCRETE SHALL BE L3500.

ALL CASTINGS ARE TO BE COATED WITH BITUMINOUS PAINT.
BRICK GRATE INLET SHALL NOT EXCEED 6 FT.

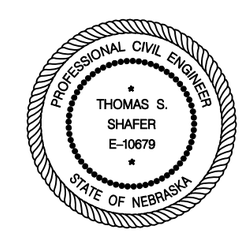

GRATE INLETS, TYPE 'F'
L.S.P. 131