USER: SIECAW
DATE: Friday, March 17, 2006
DGN: ...\standard\2006\lsp161.dgn

CITY OF LINCOLN NEBRASKA	CITY PROJECT NO.	SHEET NO.
	LSP	1
	Date: 03-2005	Drawn: CAW
	Scale NONE	Checked:
		Approved:

* DIMENSION OF PL BEFORE BENDING

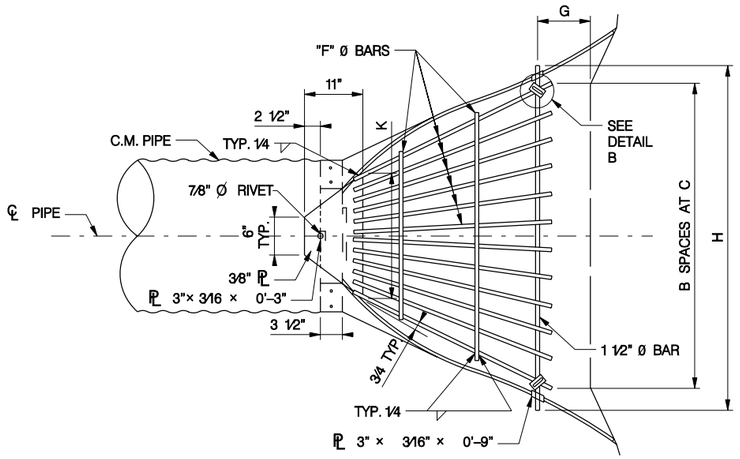

PLAN FOR BAR GRATE

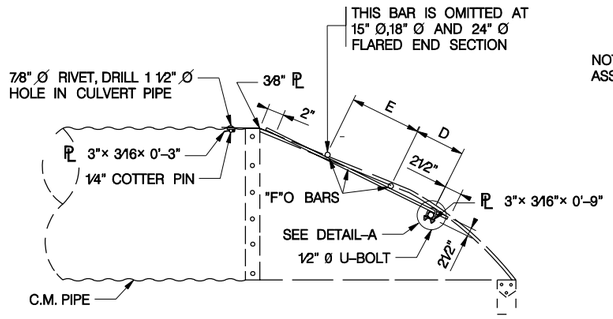

ELEVATION OF BAR GRATE

BAR GRATE FOR METAL FLARED END SECTION

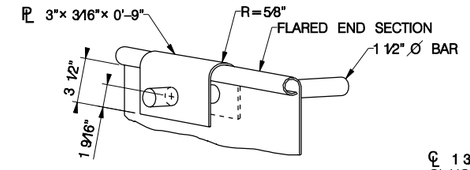

DETAIL-A

NOTE: 2-PL 3"× 3/16"× 0'-9" REQUIRED PER ASSEMBLY, 2-PER SECTION

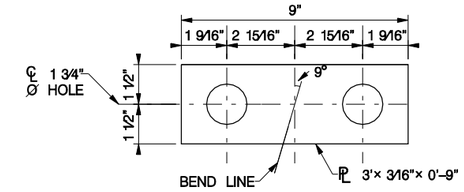

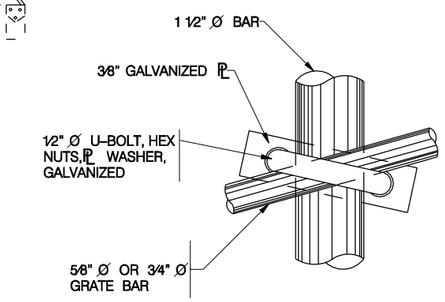

DETAIL-B

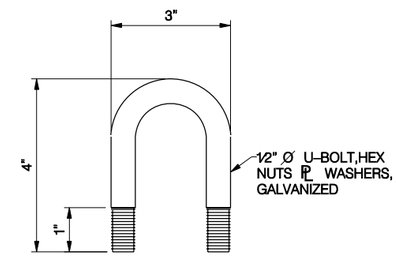

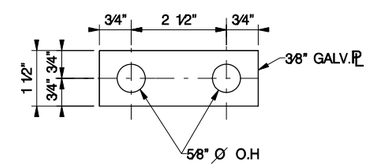

U-BOLT AND PLATE DETAIL

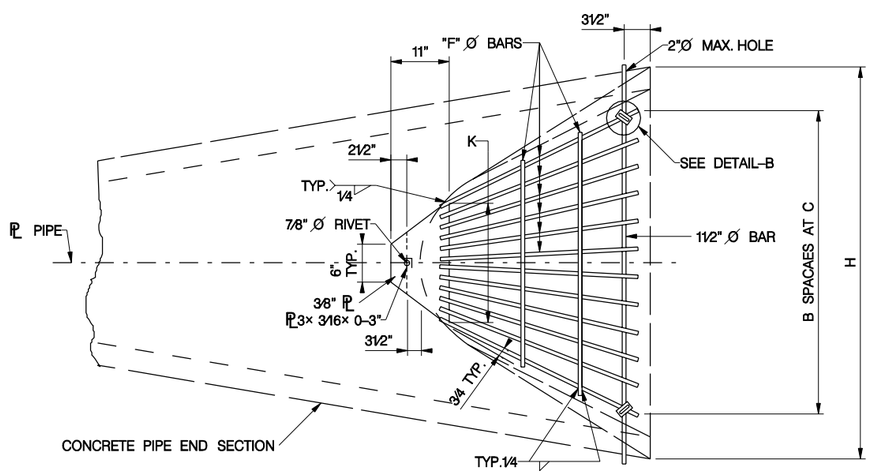

PLAN OF BAR GRATE

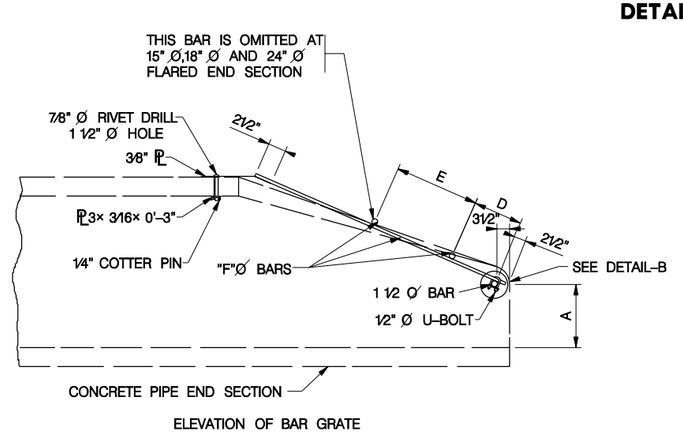

ELEVATION OF BAR GRATE

BAR GRATE FOR CONCRETE PIPE END SECTION

NOTE:
BALL BARS USED IN GRATED SHALL CONFORM TO THE REQUIREMENTS OF A.S.T.M. A575 GRADE 1020 STEEL.

THE BAR GRATE MAY BE SHOP ASSEMBLED WITH THE FLARED END SECTIONS.

THREE SEPARATE COATS OF PAINT SHALL BE APPLIED TO THE GRATES.

THE FIRST TWO COATS SHALL BE PRIMER AND THE THIRD COAT SHALL BE GREEN BRIDGE PAINT. ALL PAINT MAY BE DONE IN THE SHOP.

ALL BARS SHALL BE EPOXY COATED.

BAR GRATE DATA									
	A	B	C	D	E	F	G	H	K
15" Ø PIPE	5"	4	2'-0"	6"	———	5/8"	6"	2'-11"	1'-4"
18" Ø PIPE	8"	5	2'-6"	6"	———	5/8"	8"	3'-6"	1'-4"
24" Ø PIPE	8 1/2"	7	3'-6"	9"	———	5/8"	8"	4'-7"	1'-8"
30" Ø PIPE	11"	9	4'-6"	1'-0"	1'-6"	3/4"	1'-0"	5'-8"	1'-8"
36" Ø PIPE	1'-2"	11	5'-6"	1'-0"	1'-6"	3/4"	1'-0"	6'-9"	2'-0"

NOTE:
INSTALL BAR GRATE ON INLET ENDS OF STORM SEWER SYSTEM ONLY.

PROFESSIONAL CIVIL ENGINEER
THOMAS S. SHAFER
E-10679
STATE OF NEBRASKA

BAR GRATE FOR FLARED END SECTIONS
L.S.P. 161