USER: SIECAW
DATE: Friday, March 17, 2006
DGN: ...\standard\2006\lsp82.dgn

CITY OF LINCOLN NEBRASKA	CITY PROJECT NO.	SHEET NO.
	LSP	1
	Date: 03-2005	Drawn: CAW
	Scale NONE	Checked:
		Approved:

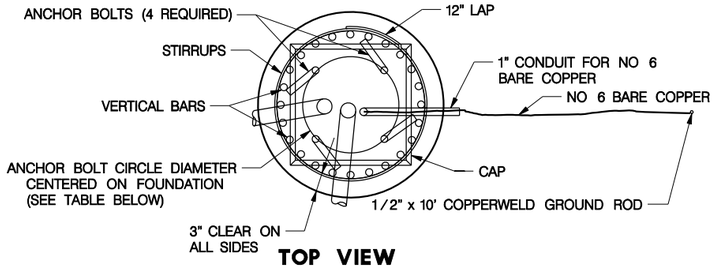

TOP VIEW
F-8 FOUNDATION FOR POLES

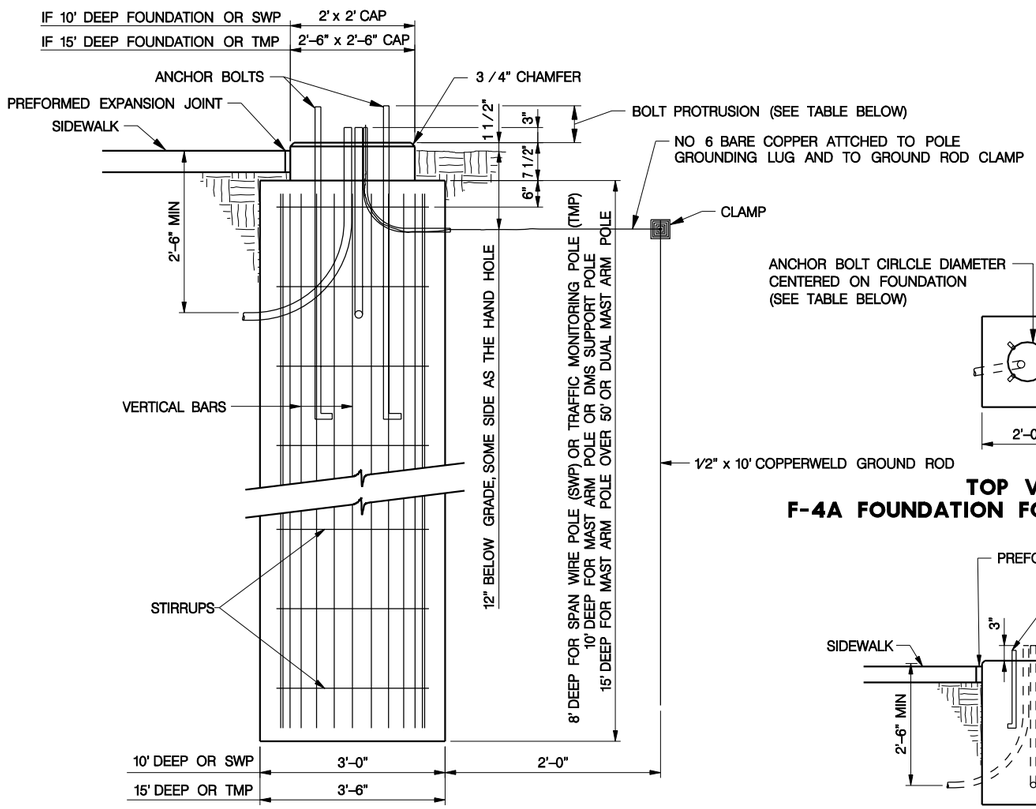

SIDE VIEW
F-8 FOUNDATION FOR POLES

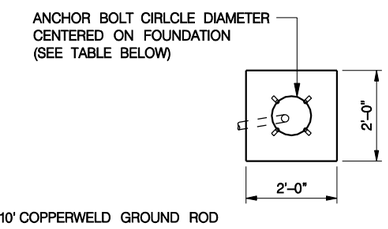

TOP VIEW
F-4A FOUNDATION FOR PEDESTAL POLES

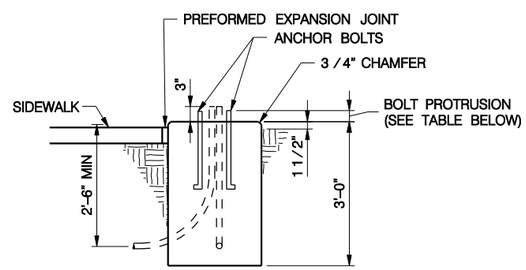

SIDE VIEW
F-4A FOUNDATION FOR PEDESTAL POLES

SEE F-8 FOR GROUND ROD INSTALLATION

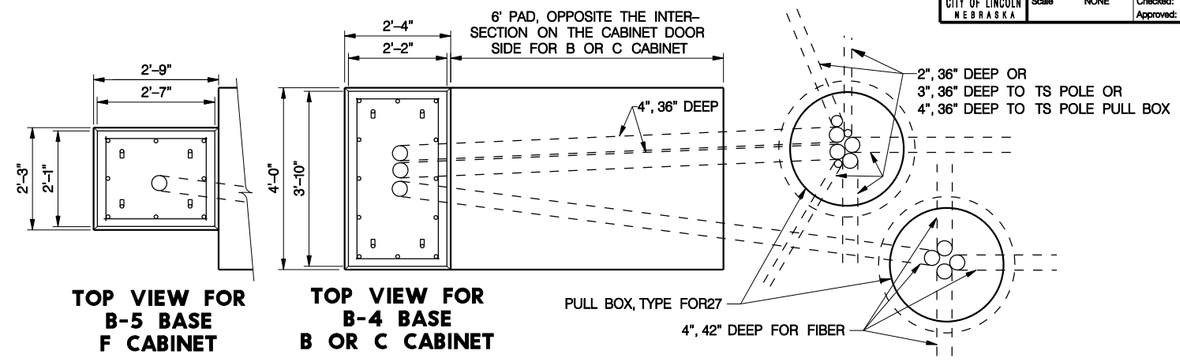

TOP VIEW FOR B-5 BASE F CABINET

TOP VIEW FOR B-4 BASE B OR C CABINET

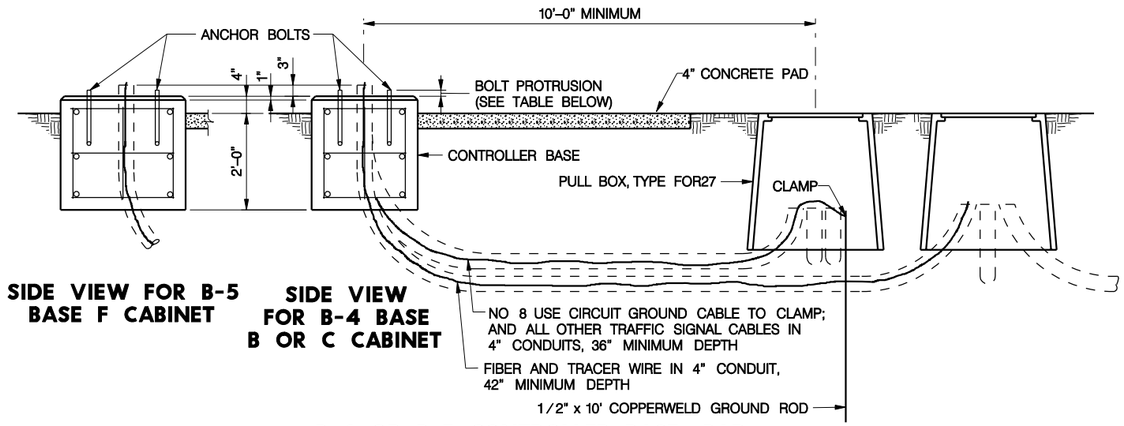

SIDE VIEW FOR B-5 BASE F CABINET

SIDE VIEW FOR B-4 BASE B OR C CABINET

B-4 OR B-5 CONTROLLER BASE, PAD AND GROUND ROD INSTALLATION

ALL STEEL IS NO 4 WITH A MINIMUM 3" CLEARANCE TO ANY EDGE OF CONCRETE

GROUNDING

THE GROUND ROD FOR THE B-4 AND F-4A CONTROLLER BASE SHALL BE INSTALLED IN A PULL BOX NOT LESS THAN 10' FROM THE CONTROLLER. (1) NO 8 USE CABLE SHALL BE INSTALLED BETWEEN THE CONTROLLER AND THE GROUND ROD. THE CONTRACTOR SHALL BOND THE CABLES AT THE GROUND ROD AND IN THE CABINET. THE GROUND ROD FOR THE F-8 AND F-4A FOUNDATION SHALL BE LOCATED 2' FROM THE EDGE OF THE FOUNDATION AND THE TOP OF THE GROUND ROD SHALL BE 1' BELOW THE FINISHED GRADE. UNDER NO CIRCUMSTANCES SHALL THE GROUND ROD BE INSTALLED WITHIN THE CABINET FOUNDATION.

CONDUIT BENDS

FACTORY 90 DEGREE BENDS SHALL BE USED EVERYWHERE VERTICALLY, EXCEPT IN FIBER PULL BOXES AND CABINET BASES, WHERE 90 DEGREE SWEEPS SHALL BE USED. THE SWEEP SHALL EXTEND 12" ABOVE THE BOTTOM OF THE PULL BOX.

F-8 REINFORCING STEEL

ALL STEEL TO BE A MINIMUM OF 3" FROM EDGE OF FOUNDATION

F-502 (8) 7'-4" OF NO 5 VERTICAL BARS FOR 8'-0" DEEP
(8) 9'-4" OF NO 5 VERTICAL BARS FOR 10'-0" DEEP
(24) 14'-4" OF NO 7 VERTICAL BARS FOR 15'-0" DEEP

F-503 (8) NO 5 STIRRUPS AT 1'-0" CENTERS FOR 8'-0" DEEP
(10) NO 5 STIRRUPS AT 1'-0" CENTERS FOR 10'-0" DEEP
(10) NO 4 STIRRUPS AT 1'-6" CENTERS FOR 15'-0" DEEP

(ALTERNATE)
F-501 (8) NO 5 STIRRUPS AT 1'-0" CENTERS FOR 8'-0" DEEP
(10) NO 5 STIRRUPS AT 1'-0" CENTERS FOR 10'-0" DEEP
(10) NO 4 STIRRUPS AT 1'-6" CENTERS FOR 15'-0" DEEP

ANCHOR BOLT INFORMATION

	CABINET	PEDESTAL	18' – 32' ARM	34' – 50' ARM	55' – 70' ARM	75' ARM	19' DMS	55' TMP	60' TMP	65' TMP	70' TMP	75' TMP
ANCHOR BOLT SIZE	3/4" x 18" x 3"	3/4" x 18" x 3"	1 1/2" x 54" x 6"	1 3/4" x 84" x 6"	2" x 84" x 6"	2" x 84" x 6"	1 1/2" x 60" x 6"	1 1/2" x 54" x 6"	1 1/2" x 54" x 6"	1 1/2" x 54" x 6"	1 1/2" x 54" x 6"	1 1/2" x 54" x 6"
BOLT CIRCLE	–	13"	17"	17 1/2"	20 1/2"	22 1/2"	16"	20"	21"	23"	25"	27"
BOLT Protrusion	1 1/2"	2"	6 1/2"	7"	7 1/2"	7 1/2"	6 1/2"	6 1/2"	6 1/2"	6 1/2"	6 1/2"	6 1/2"

Pedestal Pole uses F-4A Foundation
TMP is Traffic Monitoring Pole

PROFESSIONAL CIVIL ENGINEER
THOMAS S. SHAFER
E-10679
STATE OF NEBRASKA

FOUNDATIONS AND BASES
L.S.P. 82